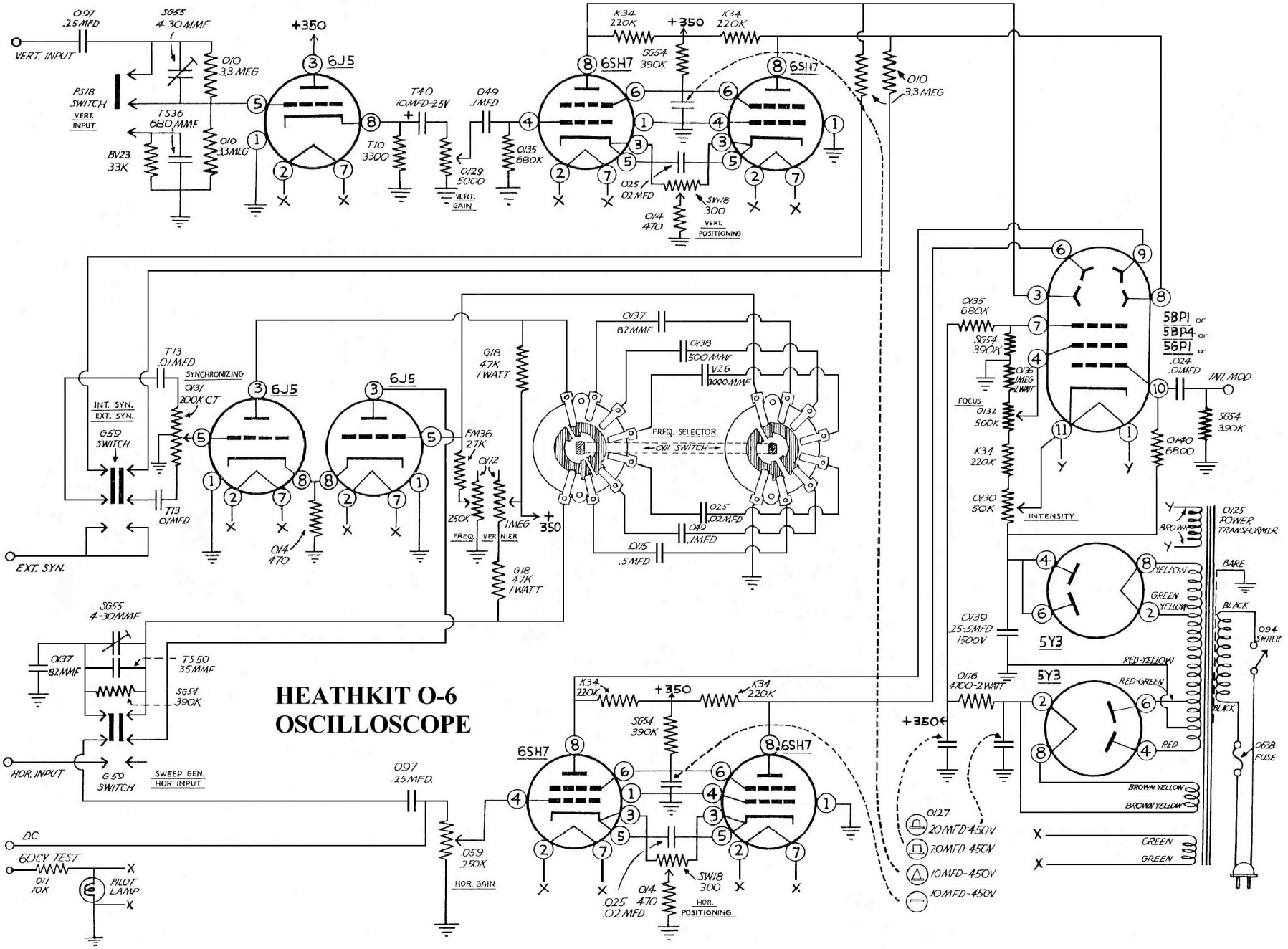
HEATHKIT O-6
OSCILLOSCOPE
VERT. INPUT
PS18 SWITCH
VERT. INPUT
SG55 4-30 MMF
TS36 680 MMF
BV23 33K
010 3.3 MEG
+350
6J5
T40 10MFD-25V
T10 3300
049 .1MFD
0129 5000
VERT. GAIN
0135 680K
K34 220K
SG54 390K
6SH7
025 .02 MFD
014 470
SW18 300
VERT. POSITIONING
T13 .01MFD
SYNCHRONIZING
0131 200K CT
INT. SYN.
EXT. SYN.
G59 SWITCH
EXT. SYN.
FM36 27K
0112
250K
1MEG
FREQ. VERNIER
G18 47K 1 WATT
0137 82MMF
0138 500MMF
V26 3000MMF
FREQ. SELECTOR
0111 SWITCH
0115 .5MFD
SG55 4-30MMF
TS50 35MMF
HOR. INPUT
G59 SWITCH
SWEEP GEN. HOR. INPUT
097 .25MFD.
DC
60CY TEST
011 10K
PILOT LAMP
059 .250K
HOR. GAIN
SW18 300
HOR. POSITIONING
0127
20MFD-450V
20MFD-450V
10MFD-450V
10MFD-450V
0135 680K
SG54 390K
0136 1MEG 2WATT
FOCUS
0132 500K
K34 220K
0130 50K
INTENSITY
5BP1 or 5BP4 or 5GP1 or
.024 .01MFD
INT. MOD
SG54 390K
0140 6800
0125 POWER TRANSFORMER
BROWN
YELLOW
GREEN YELLOW
BARE
BLACK
094 SWITCH
0139 .25-.5MFD 1500V
5Y3
RED-YELLOW
RED-GREEN
RED
0116 4700-2WATT
BROWN YELLOW
GREEN
0638 FUSE